16/24-Port 100M Long-Range PoE Switch

Quick Start Guide

TABLE OF CONTENTS

Chapter 1 Introduction 1
1.1 Overview 1
1.2 Packing List 1
1.3 Appearance 2
1.3.1 Front Panel 2
1.3.2 Rear Panel 4
Chapter 2 Installation 5
2.1 Preventive and Cautionary Tips 5
2.2 Working Environment Requirements 5
2.2.1 Temperature and Humidity 5
2.2.2 Static Electricity Protection 5
2.2.3 Lightning Protection 6
2.2.4 Installation Position 6
2.3 Installation 6
2.4 Grounding 7
2.4.1 With Grounding Bar 7
2.4.2 Without Grounding Bar 8
Chapter 3 Physical Connection 10
3.1 Connecting RJ45 Port 10
3.2 Connecting 1000M Combo Port 10
3.3 Checking the Cabling 11
3.4 Powering on Switch 11

Quick Start Guide

COPYRIGHT ©2018 Hangzhou Hikvision Digital Technology Co., Ltd.
ALL RIGHTS RESERVED.
Any and all information, including, among others, wordings, pictures, graphs are the properties of Hangzhou Hikvision Digital Technology Co., Ltd. or its subsidiaries (hereinafter referred to be "Hikvision"). This user manual (hereinafter referred to be "the Manual") cannot be reproduced, changed, translated, or distributed, partially or wholly, by any means, without the prior written permission of Hikvision. Unless otherwise stipulated, Hikvision does not make any warranties, guarantees or representations, express or implied, regarding to the Manual.

About this Manual

This Manual is applicable to DS-3E0318P-E/M(B) and DS-3E0326P-E/M(B) Switch.
The Manual includes instructions for using and managing the product. Pictures, charts, images and all other information hereinafter are for description and explanation only. The information contained in the Manual is subject to change, without notice, due to firmware updates or other reasons. Please find the latest version in the company website (http://overseas.hikvision.com/en/).
Please use this user manual under the guidance of professionals.

Trademarks Acknowledgement

HIKVISION and other Hikvision's trademarks and logos are the properties of Hikvision in various jurisdictions. Other trademarks and logos mentioned below are the properties of their respective owners.

Legal Disclaimer

TO THE MAXIMUM EXTENT PERMITTED BY APPLICABLE LAW, THE PRODUCT DESCRIBED, WITH ITS HARDWARE, SOFTWARE AND FIRMWARE, IS PROVIDED "AS IS", WITH ALL FAULTS AND ERRORS, AND HIKVISION MAKES NO WARRANTIES, EXPRESS OR IMPLIED, INCLUDING WITHOUT LIMITATION, MERCHANTABILITY, SATISFACTORY QUALITY, FITNESS FOR A PARTICULAR PURPOSE, AND NON-INFRINGEMENT OF THIRD PARTY. IN NO EVENT WILL HIKVISION, ITS DIRECTORS, OFFICERS, EMPLOYEES, OR AGENTS BE LIABLE TO YOU FOR ANY SPECIAL, CONSEQUENTIAL, INCIDENTAL, OR INDIRECT DAMAGES, INCLUDING, AMONG OTHERS, DAMAGES FOR LOSS OF BUSINESS PROFITS, BUSINESS INTERRUPTION, OR LOSS OF DATA OR DOCUMENTATION, IN CONNECTION WITH THE USE OF THIS PRODUCT, EVEN IF HIKVISION HAS BEEN ADVISED OF THE POSSIBILITY OF SUCH DAMAGES.

REGARDING TO THE PRODUCT WITH INTERNET ACCESS, THE USE OF PRODUCT SHALL BE WHOLLY AT YOUR OWN RISKS. HIKVISION SHALL NOT TAKE ANY RESPONSIBILITES FOR ABNORMAL OPERATION, PRIVACY LEAKAGE OR OTHER DAMAGES RESULTING FROM CYBER ATTACK, HACKER ATTACK, VIRUS INSPECTION, OR OTHER INTERNET SECURITY RISKS; HOWEVER, HIKVISION WILL PROVIDE TIMELY TECHNICAL SUPPORT IF REQUIRED.

SURVEILLANCE LAWS VARY BY JURISDICTION. PLEASE CHECK ALL RELEVANT LAWS IN YOUR JURISDICTION BEFORE USING THIS PRODUCT IN ORDER TO ENSURE THAT YOUR USE CONFORMS THE APPLICABLE LAW. HIKVISION SHALL NOT BE LIABLE IN THE EVENT THAT THIS PRODUCT IS USED WITH ILLEGITIMATE PURPOSES.

IN THE EVENT OF ANY CONFLICTS BETWEEN THIS MANUAL AND THE APPLICABLE LAW, THE LATER PREVAILS.

Regulatory Information

FCC Information

Please take attention that changes or modification not expressly approved by the party responsible for compliance could void the user's authority to operate the equipment.

FCC compliance: This equipment has been tested and found to comply with the limits for a Class A digital device, pursuant to part 15 of the FCC Rules. These limits are designed to provide reasonable protection against harmful interference when the equipment is operated in a commercial environment. This equipment generates, uses, and can radiate radio frequency energy and, if not installed and used in accordance with the instruction manual, may cause harmful interference to radio communications. Operation of this equipment in a residential area is likely to cause harmful interference in which case the user will be required to correct the interference at his own expense.

FCC Conditions

This device complies with part 15 of the FCC Rules. Operation is subject to the following two conditions:

1. This device may not cause harmful interference.
2. This device must accept any interference received, including interference that may cause undesired operation.

EU Conformity Statement

This product and - if applicable - the supplied accessories too are marked with "CE" and comply therefore with the applicable harmonized European standards listed under the EMC Directive 2014/30/EU, the LVD Directive 2014/35/EU, the RoHS Directive 2011/65/EU.

2012/19/EU (WEEE directive): Products marked with this symbol cannot be disposed of as unsorted municipal waste in the European Union. For proper recycling, return this product to your local supplier upon the purchase of equivalent new equipment, or dispose of it at designated collection points. For more information see: www.recyclethis.info

2006/66/EC (battery directive): This product contains a battery that cannot be disposed of as unsorted municipal waste in the European Union. See the product documentation for specific battery information. The battery is marked with this symbol, which may include lettering to indicate cadmium (Cd), lead (Pb), or mercury (Hg). For proper recycling, return the battery to your supplier or to a designated collection point. For more information see: www.recyclethis.info

Industry Canada ICES-003 Compliance

This device meets the CAN ICES-3 (A)/NMB-3(A) standards requirements.

Applicable Models

This manual is applicable to switches below: DS-3E0318P-E/M(B), DS-3E0326P-E/M(B).

Symbol Conventions

The symbols that may be found in this document are defined as follows.

Symbol	Description
NOTE	Provides additional information to emphasize or supplement important points of the main text.
WARNING	Indicates a potentially hazardous situation, which if not avoided, could result in equipment damage, data loss, performance degradation, or unexpected results.
DANGER	Indicates a hazard with a high level of risk, which if not avoided, will result in death or serious injury.

WARNING

- During the installation and utilization of the device, please strictly conform to electrical safety rules in different nations and regions.
- The device must be installed in machine room only, and only maintenance staff or qualified person should access to the device.
- Do not touch the upper cover area of the device that may be overheated.
- Power must be shut down during cable connection, device installation and dismantlement.
- You shall acknowledge that the use of the device with Internet access might be under network security risks, please strengthen protection for your personal information and data security. If you find the device might be under network security risks, please contact with us.
- Proper configuration of all passports and other security settings is the responsibility of the installer, and you shall keep user name and passports properly.

Chapter 1 Introduction

1.1 Overview

DS-3E0318P-E/M(B) and DS-3E0326P-E/M(B) unmanaged switches are layer 2 100M long-range PoE switches, providing 16 or 24 10/100M PoE ports, one 10/100/1000M RJ45 port, and one 10/100/1000M SFP fiber optical port. The switches provide advanced PoE technology and support extend mode with long-range access up to 250 m. The prior and stable transmission of the important surveillance area videos can also be guaranteed when connected to the high priority ports of the PoE switch. DS-3E0318P-E/M(B) and DS-3E0326P-E/M(B) switches are reliable, easy to install and maintain, and equipped with rapid switching functions. With multiple access ports, the switches are applicable for access or aggregation and upload of small-scale LAN devices.

1.2 Packing List

The packing list is shown as below. If any accessories are damaged or lost, keep the package intact and contact your dealer for replacement.

Table 1-1 Packing List of DS-3E0318P-E/M(B) and DS-3E0326P-E/M(B)

Name	Item	Quantity
Switch	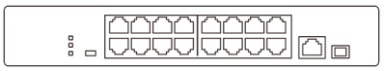 NOTE Use DS-3E0318P-E/M(B) as an example.	1
L-shaped bracket	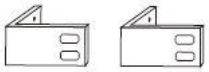	1
Power cord		1
Screw		4
User manual	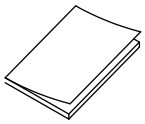	1

1.3 Appearance

1.3.1 Front Panel

Front panels of DS-3E0318P-E/M(B) and DS-3E0326P-E/M(B) are shown as below.

Front Panel of DS-3E0318P-E/M(B)

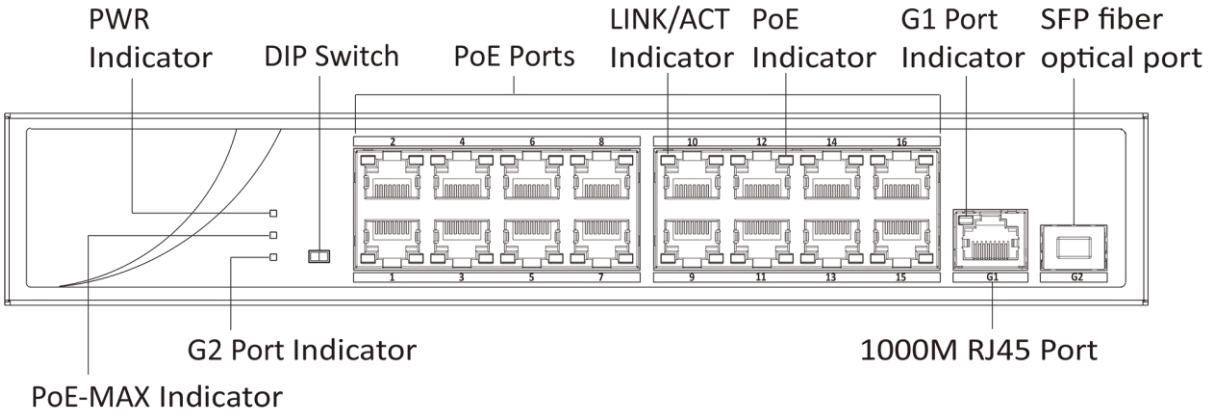

Figure 1-1 DS-3E0318P-E/M(B) Front Panel

Front Panel of DS-3E0326P-E/M(B)

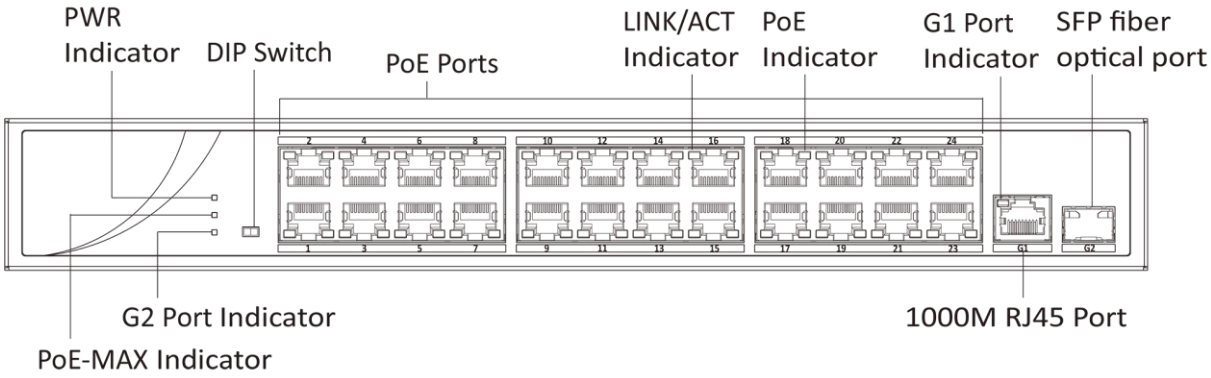

Figure 1-2 DS-3E0326P-E/M(B) Front Panel

Indicator

Indicators are used to monitor the status of switches. See the following table for the description of the indicators.

Table 1-2 Indicator Description

Indicator	Status	Description
PWR indicator	Solid on	The switch is powered on normally.
	Unlit	No power supply connected or power supply is abnormal.
G1 port	Solid on	The 1000M RJ45 port is connected.

indicator	Flashing	The 1000M RJ45 port is transmitting data.
	Unlit	No 1000M RJ45 port connected or connection is abnormal.
G2 port indicator	Solid on	The SFP fiber optical port is connected.
	Flashing	The SFP fiber optical port is transmitting data.
	Unlit	No SFP fiber optical port connected or connection is abnormal.
LINK/ACT indicator	Solid on	RJ45 port is connected.
	Flashing	RJ45 port is transmitting data.
	Unlit	RJ45 port is disconnected or connection is abnormal.
PoE indicator	Solid on	The switch provides power supply to PD normally.
	Unlit	The switch is disconnected to PD, or provides power supply to PD abnormally.
PoE-MAX indicator	Solid on /Flashing	The output power of the switch is about to reach the upper limit. The power supply may be abnormal if more devices are connected.
	Unlit	The switch provides power supply to PD normally.

DIP Switch

DIP switch can be switched to two statuses: standard model, and extend model.

Table 1-3 DIP Switch Model

Model	Function
Standard	The corresponding port supports network transmission of up to 100 m, and the speed rate of the port is 100 Mbps.
Extend DS-3E0318P-E/M(B): Extend (9-16) DS-3E0326P-E/M(B): Extend (17-24)	The 9 to 16 ports of DS-3E0318P-E/M(B) and the 17 to 24 ports of DS-3E0326P-E/M(B) support network transmission of up to 250 m, and the speed rate of the port is 10 Mbps.

PoE Ports

100M PoE ports are used for other PoE devices connection via network cables.

NOTE

Ensure that your devices powered via the PoE port have their shells protected and fire-proofed, because the switches are not compliant with the Limited Power Source (LPS) standard.

G1 Port/G2 Port

- G1 port is a 1000M RJ45 port used for other devices connection via network cables.
- G2 port is a 1000M SFP fiber optical port used for other devices connection via optical fiber when plugged into with an optical module.

1.3.2 Rear Panel

Rear panel of DS-3E0318P-E/M(B) and DS-3E0326P-E/M(B) is shown as below.

Rear Panel of DS-3E0318P-E/M(B) and DS-3E0326P-E/M(B)

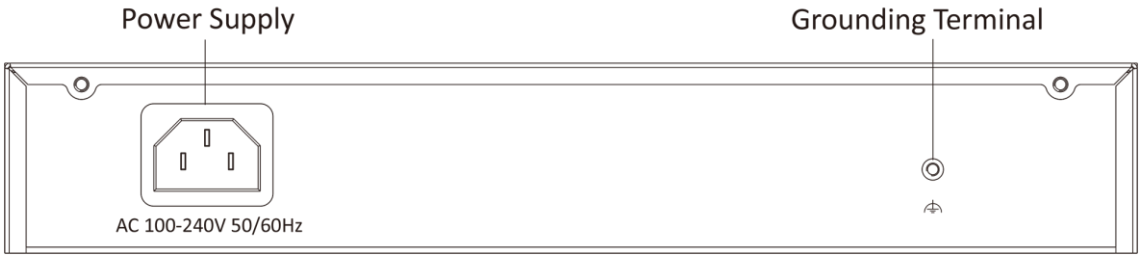

Figure 1-3 DS-3E0318P-E/M(B) and DS-3E0326P-E/M(B) Rear Panel

Grounding Terminal

The grounding terminal is used to connect to the ground cable to protect the switch from lightning. For details about grounding, see section *Grounding*.

Power Interface

Connect power port of the switch with power socket by power cord, and use 100 to 240 VAC to provide power to the switch.

NOTE

Use the attached power cord to connect the switch to socket.

Chapter 2 Installation

2.1 Preventive and Cautionary Tips

- Before installation, put on anti-static gloves.
- During the installation, power off your switch.
- Use the attached power adapter or power cord to connect the switch to power supply.
- The input voltage range must be consistent with the voltage range of the power adapter and switch.
- Ensure the switch is installed in a well-ventilated position.
- Do not open or dismantle the shell of the switch.
- Cut off power supply before cleaning the switch. Do not clean the switch with any liquid.
- Keep the switch away from power line, electric light, and power grid.

2.2 Working Environment Requirements

2.2.1 Temperature and Humidity

In order to ensure normal working and operation life of the switch, room temperature and humidity must be kept at certain level.

- If room humidity is too high for a long time, insulating materials may be ineffective or even lead to electricity leakage, mechanical performance of materials may change, and metal components may be rust, etc.
- If relative humidity is too low in the room, insulating gaskets may shrink, which leads to the loosening of screws and static electricity, and damages circuit of your switch.
- If room temperature is too high for a long time, insulating materials may be aging in a fast speed, which substantially reduces the reliability of your switch and seriously impacts its operation life.

2.2.2 Static Electricity Protection

Dust may lead to electrostatic adsorption. To protect the device from static electricity harm, pay attention to the following requirements:

- Keep the environment air clean. A regular dusting is necessary.
- Make sure the device is grounded well.

2.2.3 Lightning Protection

In thunderstorm weather, a sudden strong current may damage the switch. To protect your switch from lightning strike or strong current, please:

- Make sure the switch, rack, installation desktop, and power socket on the wall all are well-grounded.
- Route the switch cables properly.
- If you need to route cables outdoors, it is advised to use a lightning arrester.

2.2.4 Installation Position

No matter whether your switch is installed on a rack or desktop, follow the instructions below:

- Make sure the rack or desktop be stable and firm enough.
- The room must be well-ventilated. Keep at least 10 cm distance between all sides for cooling.
- Do not place any heavy or big-size object on the switch.
- Keep at least 1.5 cm vertical distance between each switch while installing it on a rack.

2.3 Installation

DS-3E0318P-E/M(B) and DS-3E0326P-E/M(B) switches only support rack installation. Follow the steps below for rack installation.

NOTE

The following panel is the front panel of the switch. For details about the ports, see section *Appearance*.

Step 1 Check the grounding and stability of the rack.

Step 2 Use the attached screws to fix the two L-shaped brackets to the sides of the switch.

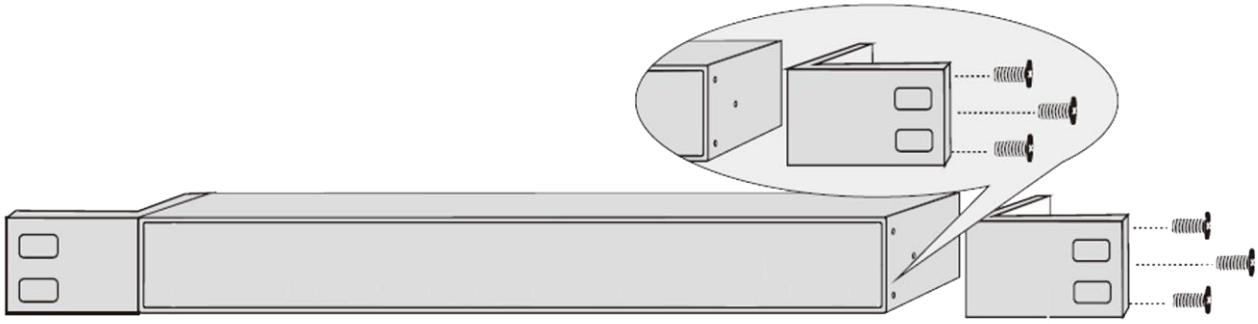

Figure 2-1 Install L-Shaped Brackets

Step 3 Place your switch on the rack, fix it to the rack with self-prepared screws, and ensure the stable installation of your switch to the rack.

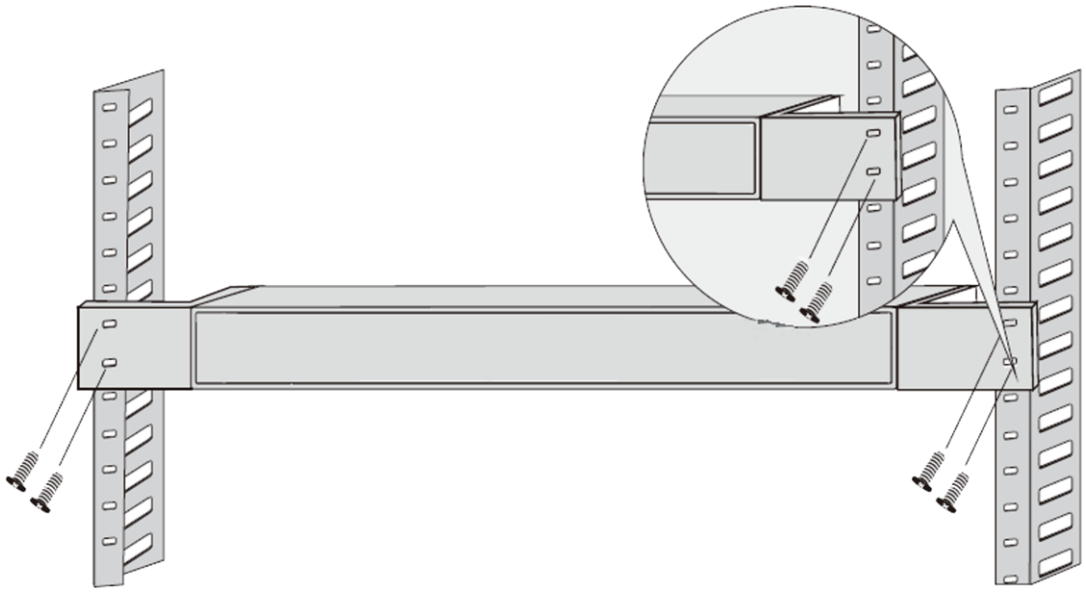

Figure 2-2 Fix Switch to Rack

NOTE

- Do not place any heavy object on the switch in case of any incident.
- Make sure sound cooling and ventilation.

2.4 Grounding

Purpose:

Grounding is used to quickly release overvoltage and overcurrent induced by lightening for switch, and to protect personal safety. Select the appropriate grounding method according to your needs.

2.4.1 With Grounding Bar

If a grounding bar is available at the installation site, follow the steps below.

Step 1 Connect one end of the grounding cable to the binding post on the grounding bar.

Step 2 Connect the other end of the grounding cable to the switch grounding terminal and fix the screw.

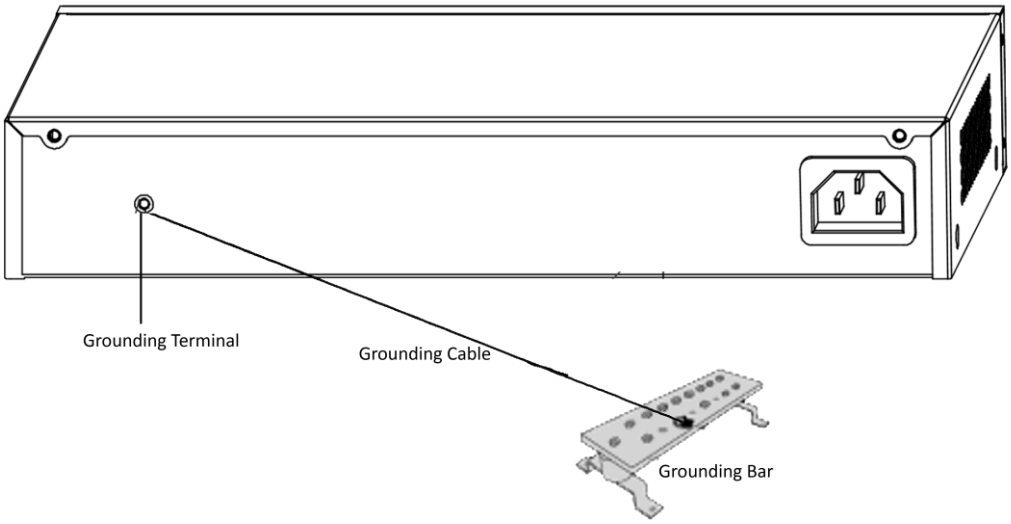

Figure 2-3 Grounding with Grounding Bar

NOTE

Connect the grounding cable to the grounding system in the equipment room. Do not connect it to a fire main or lightning rod.

2.4.2 Without Grounding Bar

If there is no grounding bar but earth is nearby and the grounding body is allowed to be buried, follow the steps below.

Step 1 Bury an angle steel or steel pipe (≥ 0.5 m) into the mud land.

Step 2 Weld one end of the grounding cable to the angle steel or steel pipe and embalm the welding point via electroplating or coating.

Step 3 Connect the other end of the grounding cable to the grounding terminal.

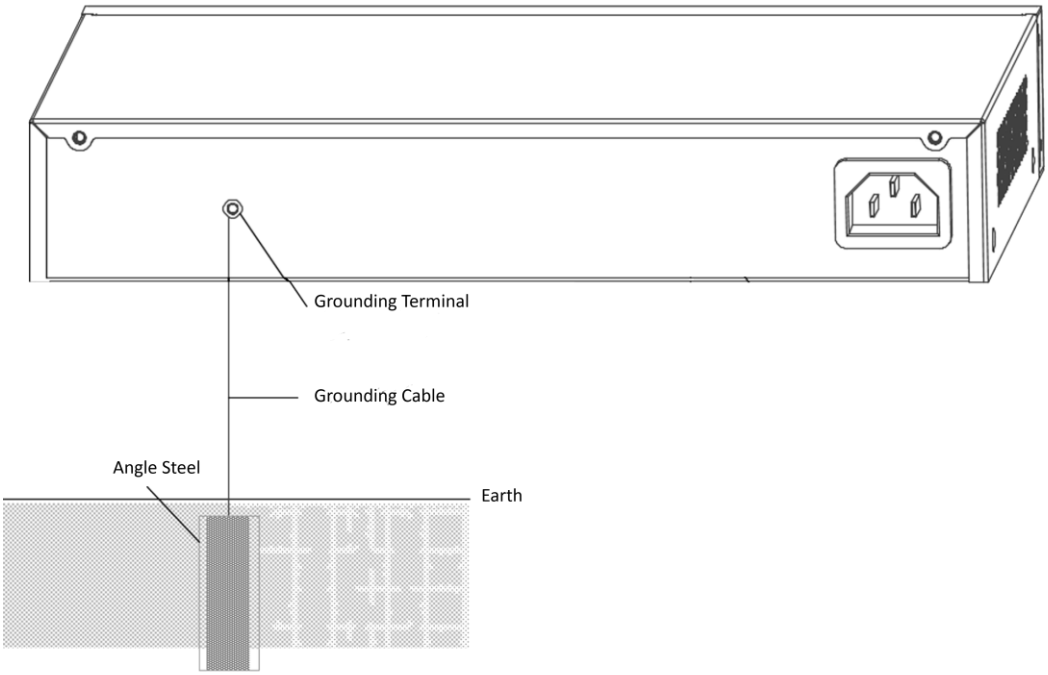

Figure 2-4 Grounding with Angle Steel

If it is not proper to bury the grounding body, an AC-powered Ethernet switch can be grounded by using the PE (Protective Earth) wire of the AC power supply. The prerequisite is that the power cord of the switch should adopt 3-pin cable with protective earth wire, and the AC power supply protective earth wire has been well grounded on the side of distribution room or AC power supply transformer.

Chapter 3 Physical Connection

3.1 Connecting RJ45 Port

Use a network cable to connect your switch to the RJ45 port of an opposite end device. The RJ45 port can connect with network camera, IP camera, NVR, switch, etc.

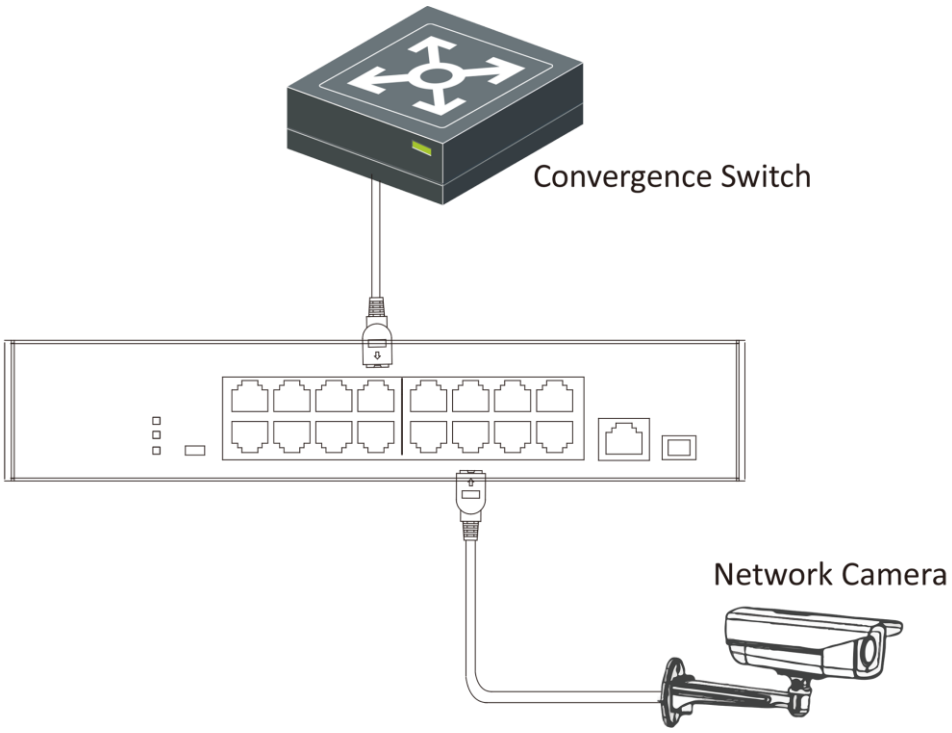

Figure 3-1 RJ45 Port Connection

3.2 Connecting 1000M Fiber Optical Port

This section uses dual-fiber SFP optical module as an example.

WARNING

Do not bend fiber optic (curvature radius ≥ 10 cm) overly.

Do not look directly at fiber optic connector because laser is harmful to eyes.

Step 1 Connect the two paired SFP optical module with an optical fiber.

Step 2 Hold SFP optical module from one side, and smoothly plug it into the switch along with the SFP port slot until optical module and the switch are closely attached.

Step 3 After powering on your switch, check the status of Link/Act indicator. If the indicator is lit, the link is connected. If the indicator is unlit, the link is disconnected. Check the line, and make sure opposite devices have been started. For more details, see section *Indicator*.

3.3 Checking the Cabling

Before powering your switch, make sure that:

- The operating power supply is compliant with rated input standard.
- Port cables and grounding cables are correctly connected.
- If there is outdoor cabling, connect a lightning rod and lightening arrester to the cable.

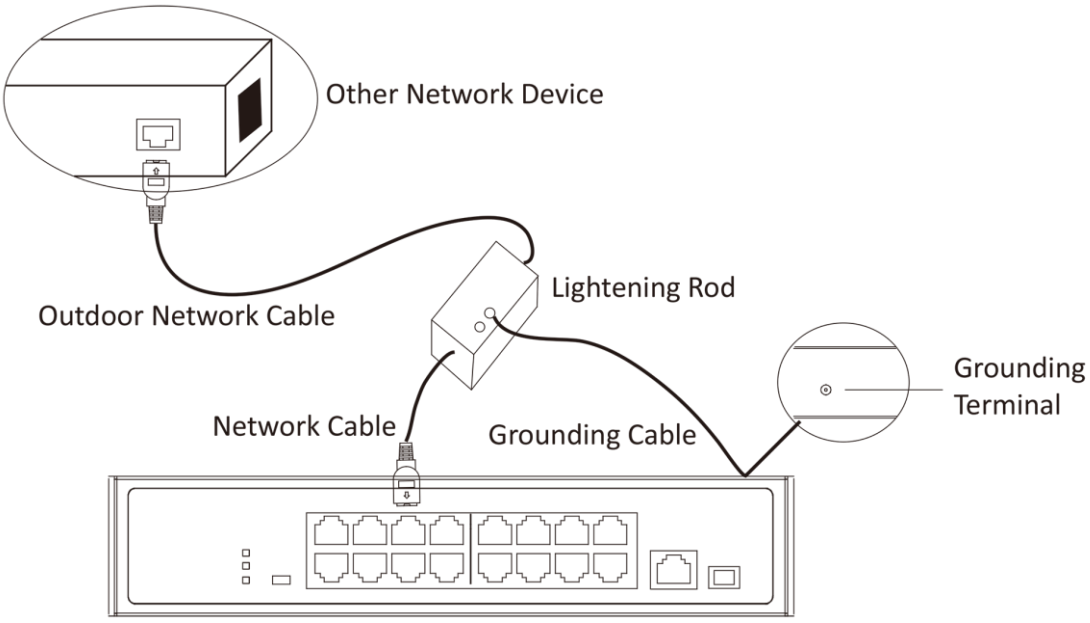

Figure 3-2 Lightning Rod Connection

3.4 Powering on Switch

Please use the attached power cord to provide power to the switch.

See Far, Go Further

UD11877B-A